Rinnai | Linear 800 gas fireplace

This diagram is provided to assist you to identify parts if replacement is necessary. Contact your place of purchase or the manufacturer to enquire about parts, availability and/or service.

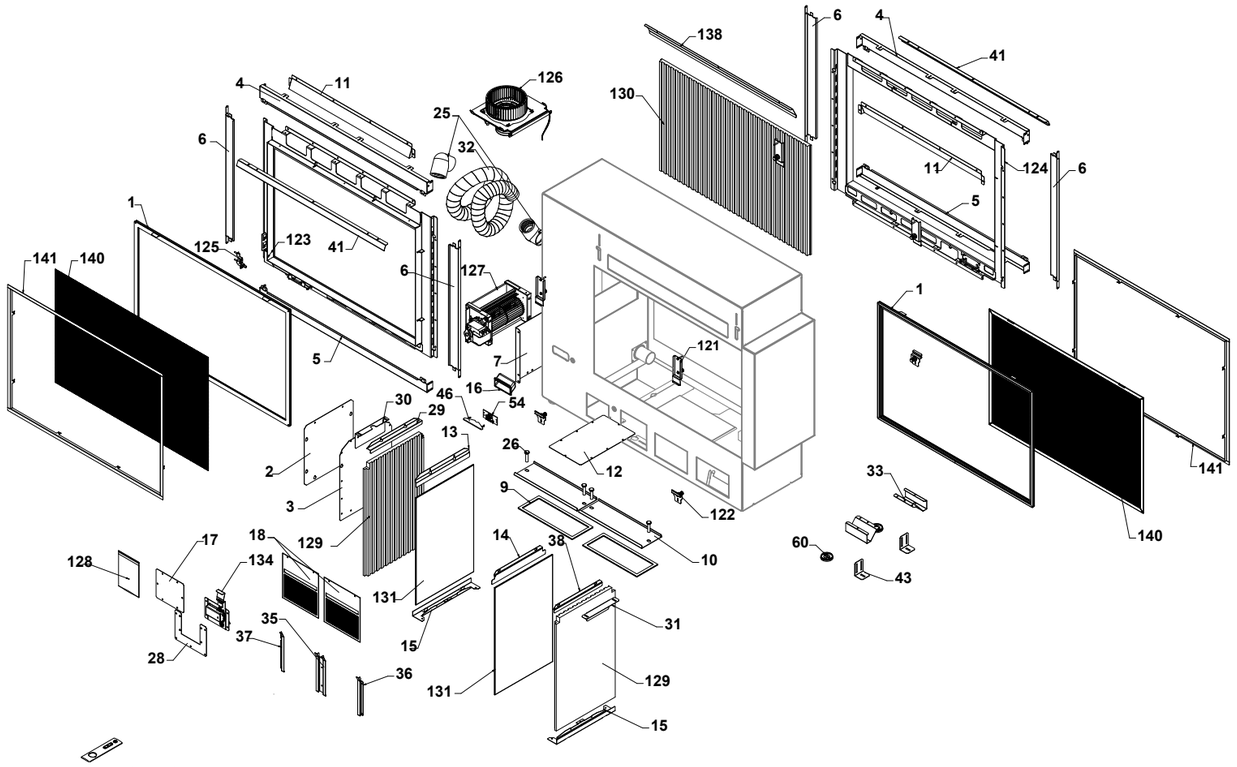

Ref.	Description	Part No.
1	Assembly glass frame	13360
2	Panel fan access hatch A	13317
3	Panel fan access hatch B	13318
4	Panel wallboard support top	13371
5	Panel wallboard support bottom	13372
6	Panel wallboard support side	13373
7	Panel end support	13337
9	Gasket pressure relief	13330
10	Panel pressure relief flap	13312
11	Panel air diverter out	13315B
12	Panel access convection fan	13319
13	Panel black magic retainer	13363F
14	Panel black magic retainer	13374F
15	Panel support end black	13327F
16	Handle clip plastic	B021363
17	Panel access convection fan front	13321
18	Filter front assembly	13343GL
25	Air inlet elbow B	4328
26	Pin brass pressure relief	13352
28	Panel access inlet	13323
29	Panel ceramic holder LH	13355F
30	Panel ceramic spacer LH	13356
31	Panel ceramic spacer RH	13358
32	Air inlet hose	10349
33	Panel handle spacer	13339
35	Guide panel filter centre	13344
36	Guide panel filter RH	13345
37	Guide panel filter LH	13346
38	Panel ceramic retainer RH	13359F
41	Panel top louvre	13529B
43	Bracket seismic restraint	13384
46	Lens IR acrylic	13416
54	PCB IR receiver	13419
60	Rubber foot assembly	1610
121	Glass retainer latch assembly top	13688
122	Glass retainer latch assembly bottom	13689
123	Lip assembly with IR bracket front	13698
124	Lip assembly with IR bracket back	13699
125	On/Off switch	13686

Ref.	Description	Part No.
126	Fan combustion	13680
127	Fan convection	13681
128	Glass seal replacement tape 4m kit	R7012
129	Ceramic end panel	13690
130	Ceramic back panel	13691
131	Magic black side panel	13695
134	Wi-Fi receiver assembly	13687
138	Panel ceramic holder back	13357F
140	Mesh assembly (accessory)	R2912
141	Trim outer (accessory)	R2915
Not drawn		
-	Bracket fan holder	13311
-	Bracket flue lock	13398
-	Bracket TH1 v2	13900
-	Power cord holder	7845
-	Nut M6 Hex	9176
-	Self fix rubber bumper 25-TNF (rubber)	11304
-	Screw M4 x 8 PHPMZ springwash	9064
-	Screw 2 truss 4 x 8 tap zinc	9151
-	Screw earth	9143

Rinnai | Linear 800 gas fireplace (standard log set)

This diagram is provided to assist you to identify parts if replacement is necessary. Contact your place of purchase or the manufacturer to enquire about parts, availability and/or service.

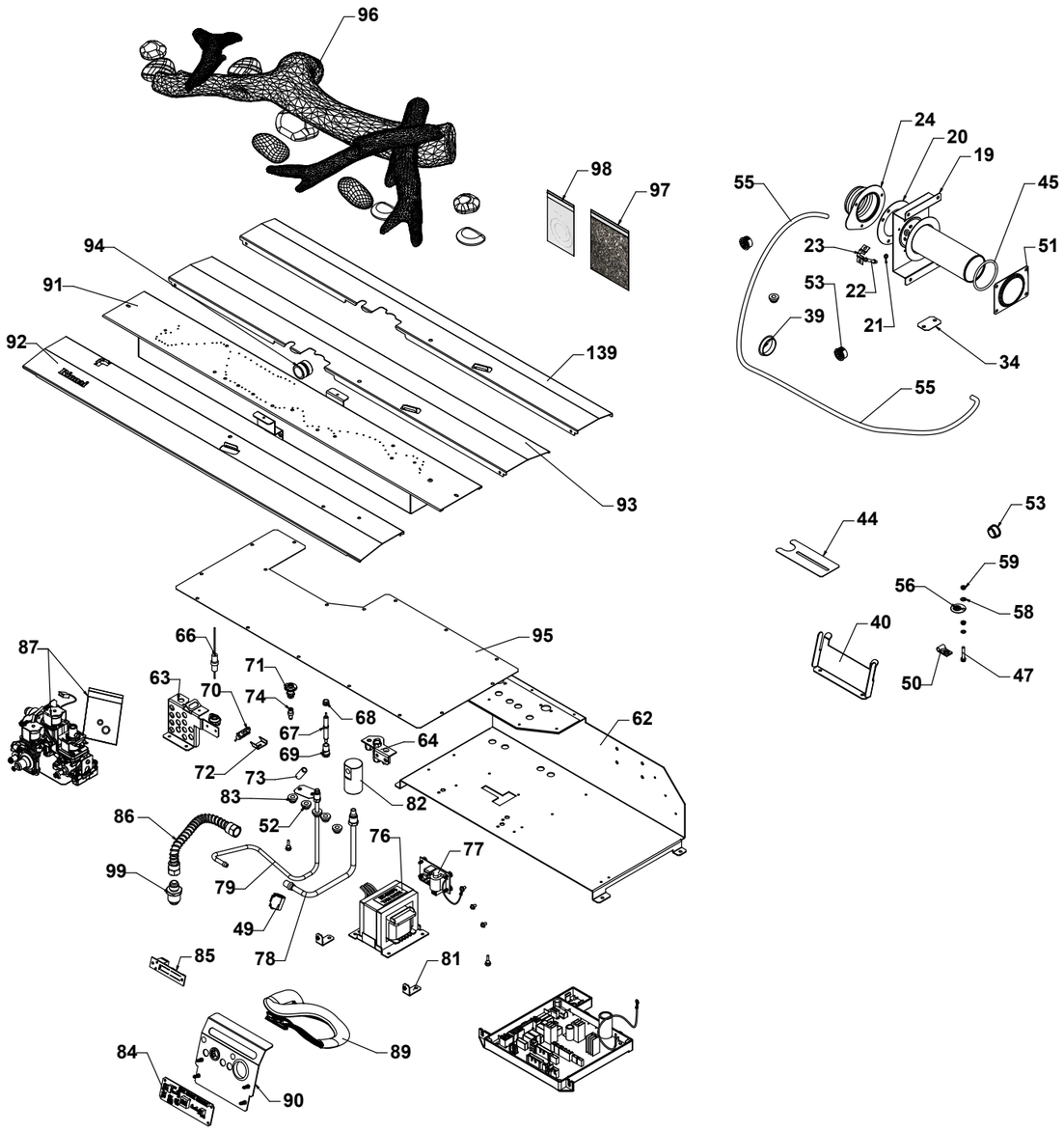

Ref.	Description	Part No.
19	Rear inlet	10236
20	Packing rear inlet	10238
21	O-ring M10B-13-4	2239
22	Tube rear air pressure	10492
23	Clamp rear air inlet pressure tube	10493
24	Air inlet adaptor	10344
34	Panel injector blanking plate	13307
39	Grommet	11937
40	Panel control PCB bracket locator	13042
44	Panel inlet pipe cover	13331
45	O-ring M10B-4-49	4850
47	Screw M4x25 PANPHIL	9076
49	Ferrite clamp	13004
50	Power cord clamp	9552
51	Panel air inlet seal plate	13532
52	Grommet silicone Ø4 hole red	10293
53	Insulating bush	10658
55	Tube silicone black 7 x 4 x 100 mm	12658
56	Tag earth symbol	11269
58	Washer flat M4 ZP	9231
59	Nut M4 ZP	9186
62	Shelf gas control assembly	13364
63	Bracket pilot	12824
64	Pilot body top convertible	7870
66	Flame rod	10274
67	Flame rod	7520
68	Sparker electrode pilot	7902
70	Double electrode	10265
71	Pilot convertible hood 3-flame	10272
72	Electrode clamp universal control	13043
73	Silicone tube 9.5 x 6.4	11641
74	Injector pilot LPG 35	7873
74	Injector pilot NG 62	7795
76	Transformer	10258
77	Igniter	13006
78	Gas supply main tube assembly	13430
79	Gas supply tube pilot	13431

Ref.	Description	Part No.
81	Bracket PCB mount	13366
82	Injector block	11530
83	Grommet silicone 2 Ø1.8 hole black	10294
84	PCB display	10253
85	Interface board	12494
86	Flextube ⅜ CW ⅝-18 nuts	7835
87	Gas control PCB (with o-ring pack)	13682
-	Gas control o-ring M10B-1-6 (x1)	6308
-	Gas control o-ring M10B-1-10 (x1)	2389
89	Harness control panel CW flex	13685
90	Control PCB holder	13704
91	Burner assembly black	13460F
92	Panel burner surround front painted	13325F
93	Panel burner surround pilot D painted	13338F
94	Aeration sleeve	7296
95	Panel access gas control	13320
96	Log and stone set A	13480
97	Vermiculite black (approx. ⅛ cup/0.03L)	16065
98	Glowing ash 3 g (wire wool)	13476
99	Adaptor ½ BSP ⅜ SAE flare	11944
139	Panel burner surround pilot S painted	13326F

Rinnai | Linear 800 gas fireplace (FlameTech log set)

This diagram is provided to assist you to identify parts if replacement is necessary. Contact your place of purchase or the manufacturer to enquire about parts, availability and/or service.

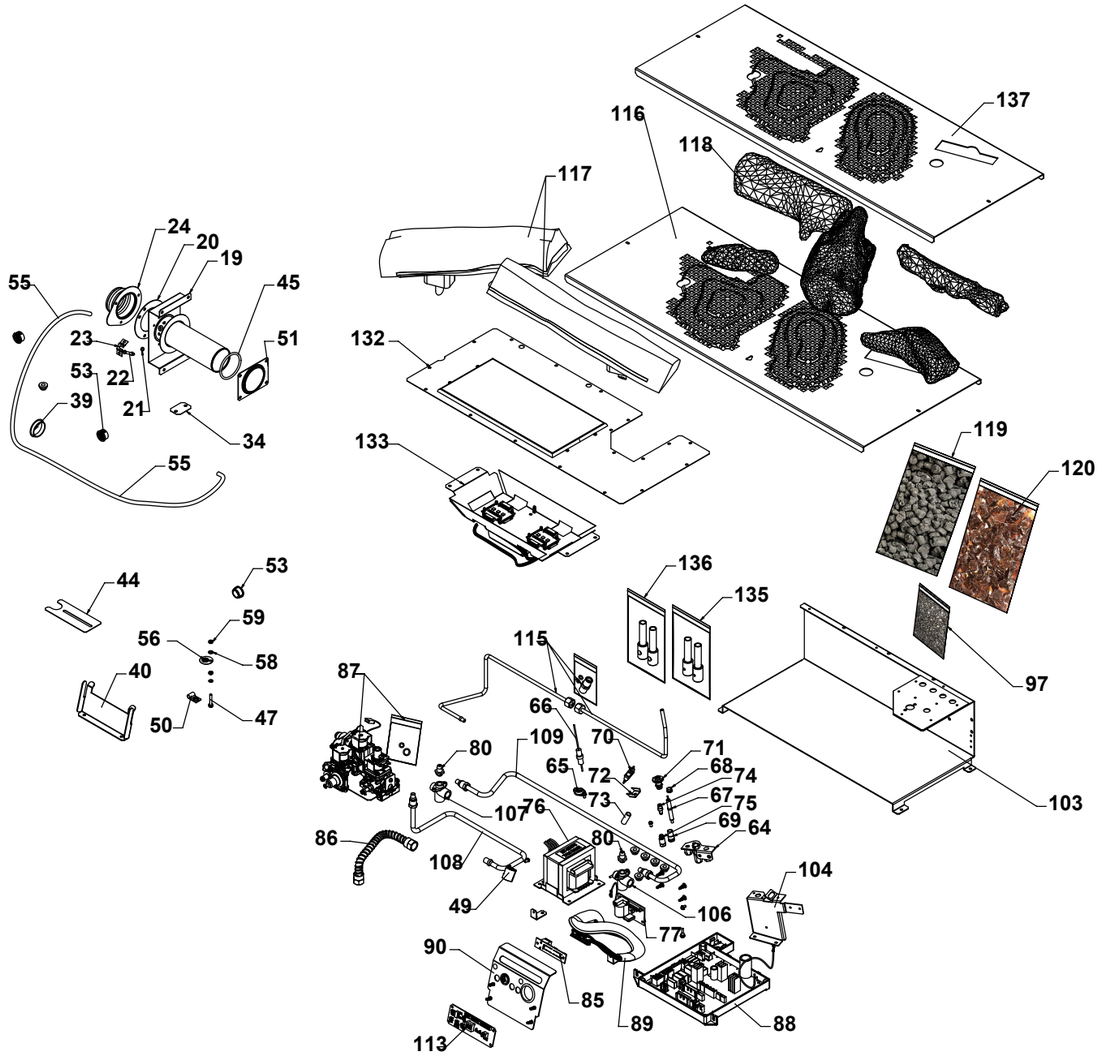

Ref.	Description	Part No.
19	Rear inlet	10236
20	Packing rear inlet	10238
21	Pressure test point packing	9995
22	Tube rear air pressure	10492
23	Clamp rear air inlet pressure tube	10493
24	Air inlet adaptor	10344
34	Panel injector blanking plate	13307
39	Grommet	11937
45	O-ring M10B-4-49	4850
49	Ferrite clamp	13004
51	Panel air inlet seal plate	13532
53	Insulating bush	10658
55	Tube silicone black	12685
64	Pilot body top convertible	7870
65	Flame rod bracket	3068
66	Flame rod FlameTech	13712
67	Flame rod	7520
68	Spacer electrode pilot	7902
69	Electrode nut ETR	7900
70	Double electrode	10265
71	Pilot convertible hood 3-flame	10272
72	Electrode clamp universal control	13043
73	Silicone tube 9.5 x 6.4 58263	12931
74	Injector pilot	7873
75	Olive 6 mm	7519
76	Transformer	10258
77	Igniter	13006
80	Injector NG 2.0	11221
80	Injector LPG 1.2	12505
85	Interface board	12494
86	Flextube ⅜ CW ⅝-18 nuts	7835
87	Gas control PCB (with o-ring pack)	13682
-	Gas control o-ring M10B-1-6 (x1)	6308
-	Gas control o-ring M10B-1-10 (x1)	2389
88	PCB	13684
89	Harness control panel CW Flex	13685
90	Control PCB holder	13704
97	Vermiculite black 1.5 L	13044
103	Shelf gas control assembly	13365
104	Bracket pilot	13408
106	Injector block A + B	7952
107	Injector block A + B + C ¼ BSP	12208
108	Gas supply tube A assembly	13432

Ref.	Description	Part No.
109	Gas tube joiner	13433
113	PCB display	10253
115	Gas tube assembly pilot	13707
116	Panel burner tray double painted	13324F
117	Log set FlameTech	13497
118	Log set FlameTech decorative	13499
119	Andrion black ember (approx. 0.13 kg)	16066
120	Crushed glass	13475
132	Access panel with glass	13706
133	LED / control assembly	13705
135	Aeration sleeves NG	13708
136	Aeration sleeves LPG	13709
137	Panel burner tray painted single	13316F

Rinnai | Linear 800 gas fireplace (wiring)

This diagram is provided to assist you to identify parts if replacement is necessary. Contact your place of purchase or the manufacturer to enquire about parts, availability and/or service.

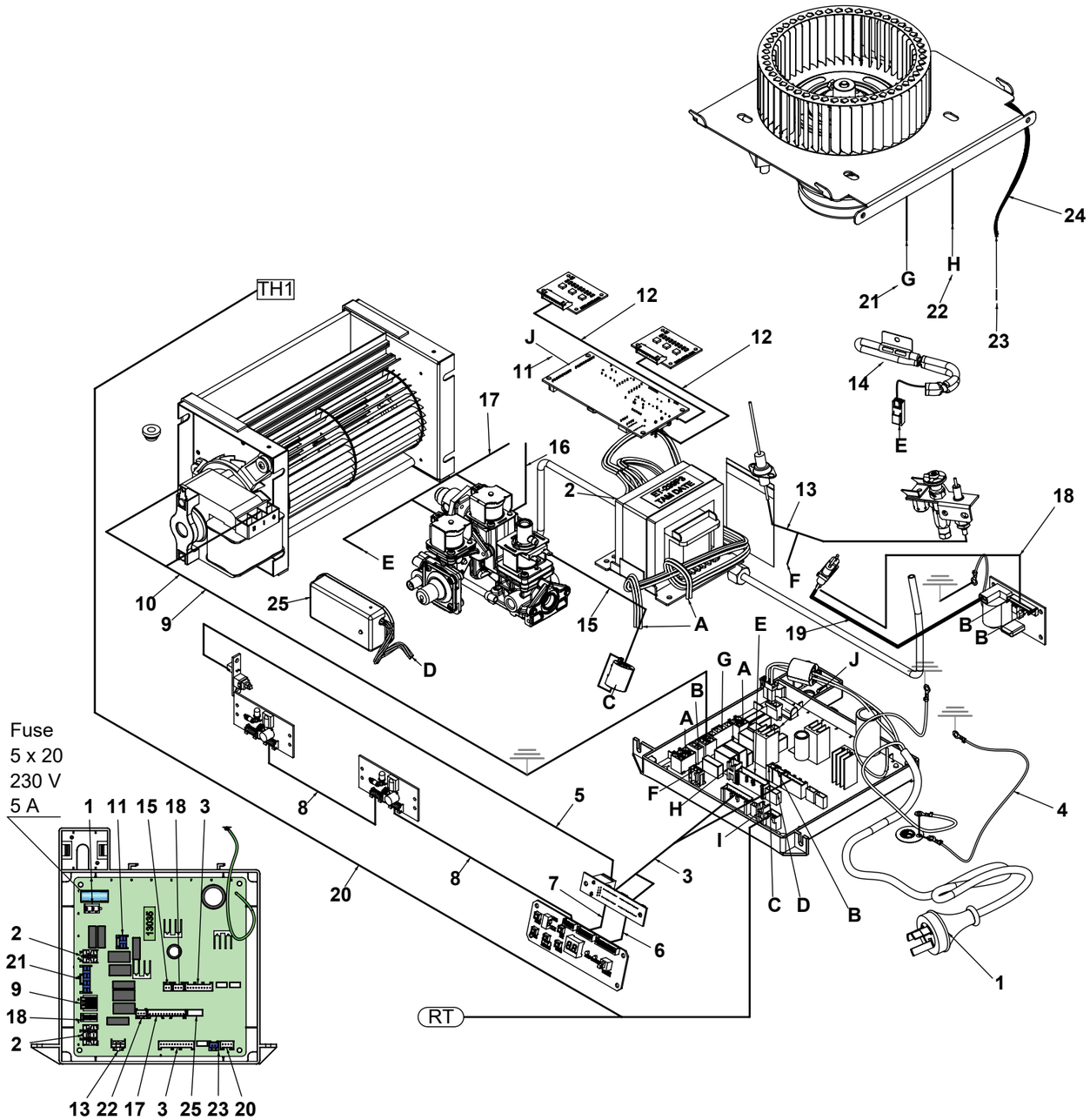

Ref.	Description	Part No.		
		800	1000	1500
1	Power cord universal control	13042		
2	Transformer	10258		
3	Harness control panel	10284		
4	Wire earth combustion fan	10387		
5	Harness on/off	13379		
6	Harness 12-way control panel	12492		
7	Harness 9-way control panel	12496		
8	Harness receiver	12656		
9	Harness fan (approx. changeover date Jan 2020)	12839 changing to 13023		
10	Harness fan extension	N/A	N/A	13351
11	Harness control PCB LED FT only	13333	N/A	N/A
12	Harness LED FT only	13334	N/A	N/A
13	Harness flame rod	13008		
14	Thermal fuse	13011		
15	Harness POV	13012		
16	Harness MV relay	13013		
17	Harness TFMV 1-burner	13014	13014	N/A
17	Harness TFMV 2-burner	N/A	N/A	13010
18	Harness ignition	13031		
19	HT lead universal control	13089		
20	Harness RT OH1	13483		
21	Harness combustion fan	10289		
22	Harness combustion fan speed	10480		
23	Harness combustion fan thermistor fly	10507		
24	Harness thermistor combustion fan	13559		
25	Wi-Fi receiver	13038		