Rinnai | Ducted Heat Pump 7 kW (DSNR07A12) **indoor unit** (DINLR07A12)

This diagram is provided to assist you to identify parts if replacement is necessary. Contact your place of purchase or the manufacturer to enquire about parts, availability and/or service.

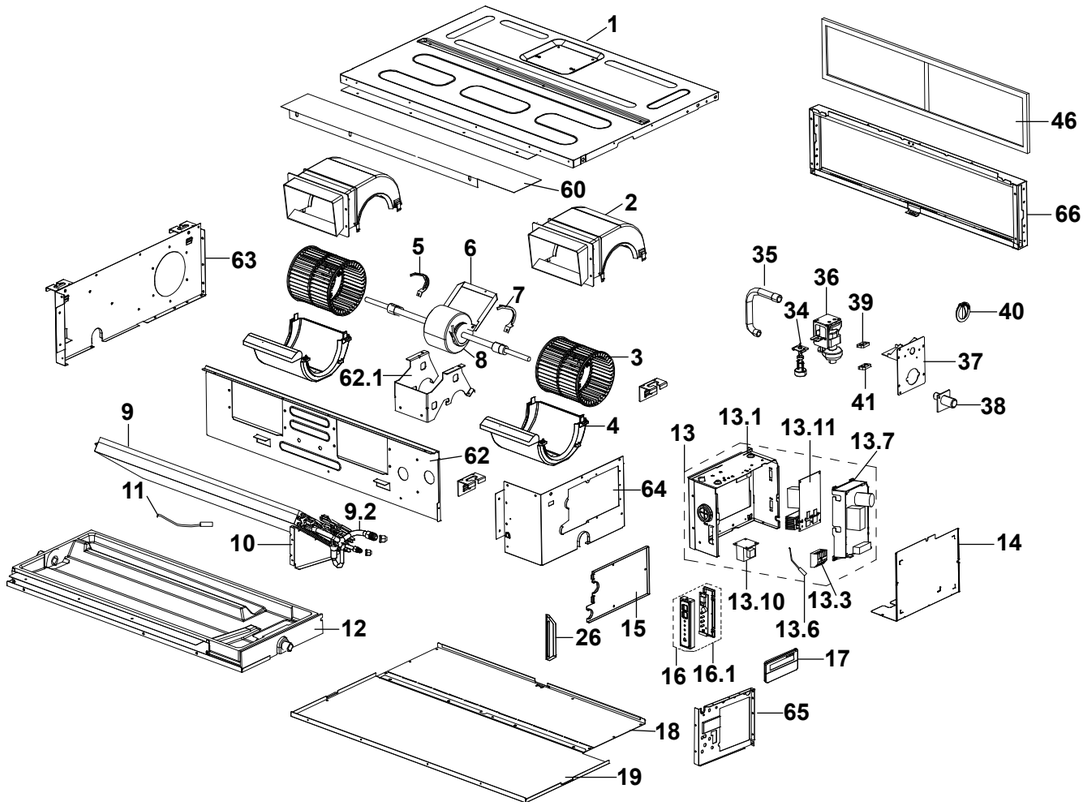

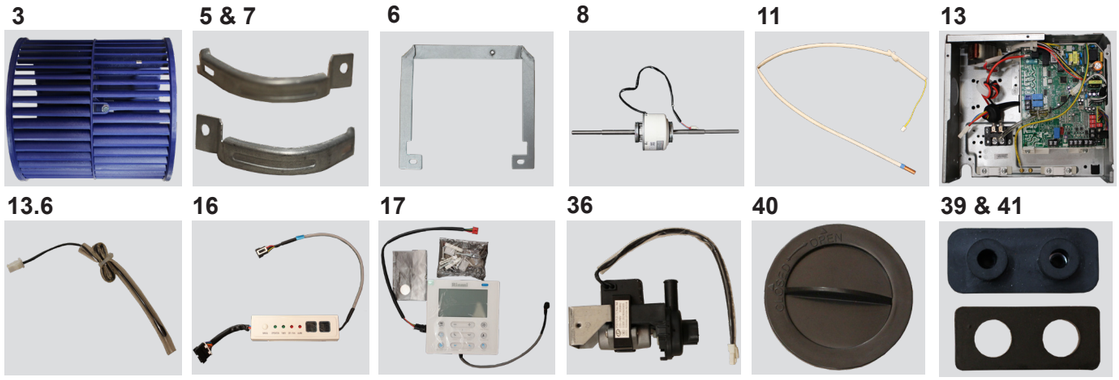

Ref.	Description	Part No.
STO - stocked to order, lead time 3-5 working days		
1	Chassis sub-assembly	-
2	Top fan scroll cover 7kW	14086 (STO)
3	Indoor fan scroll	84000311
4	Bottom fan scroll cover 7kW	14087 (STO)
5	Fan motor clamp left	B061594
6	Fan motor fixing board	B061595
7	Fan motor clamp right	B061596
8	Indoor fan motor	84000303
9	Evaporator assembly 7kW	14088 (STO)
9.2	Evaporator outlet pipe sub-assy. 7kW	14077 (STO)
10	Evaporator right support sub-assy. 7-10kW	14078 (STO)
11	Pipe temperature sensor	84000073
12	Water collector assembly 7kW	14089 (STO)
13	Main PCB	84000169
13.1	Electronic control box	-
13.3	Wire joint	-
13.6	Room temperature sensor	84000064
13.7	Duct main control board sub-assembly	-
13.10	Transformer (reactor)	-
13.11	Inverter control board sub-assembly	-
14	Electronic control box cover	-
15	Pipe clamp board sub-assembly	-
16	PCB display	84000154
16.1	Display board assembly (without cover)	84000085
17	Wired controller	84000187
18	Rear cover sub-assembly	-
19	Top cover sub-assembly	-
26	Right clapboard strengthening board	-
34	Water level sensor	-
35	Rubber tube	-
36	Drain pump	84000205
37	Exhaust pump sub-assembly 7-10kW	14090 (STO)

Ref.	Description	Part No.
38	Drain pipe 7-10 kW	14079 (STO)
39	Pump washer	84000313
40	Water test cover	84000079
41	Drain pump washer	84000082
46	Filter	-
60	Front beam sub-assembly	-
62	Middle beam sub-assembly	-
62.1	Fan motor mount 7-10kW	14080 (STO)
63	Left clapboard sub-assy.	-
64	Right clapboard sub-assy.	-
65	Right side plate	-
66	Filter frame 7kW	14091 (STO)
Refrigeration pipe connections		
-	Nut brass flare 3/8	15017
-	Nut brass flare 5/8	15019
Not shown		
-	Wi-Fi module WF-60A1	B064869
-	Wi-Fi extension cable 6 m	B026005

Rinnai | Ducted Heat Pump 7 kW (DSNR07A12) **outdoor unit** (DONSR07A12)

This diagram is provided to assist you to identify parts if replacement is necessary. Contact your place of purchase or the manufacturer to enquire about parts, availability and/or service.

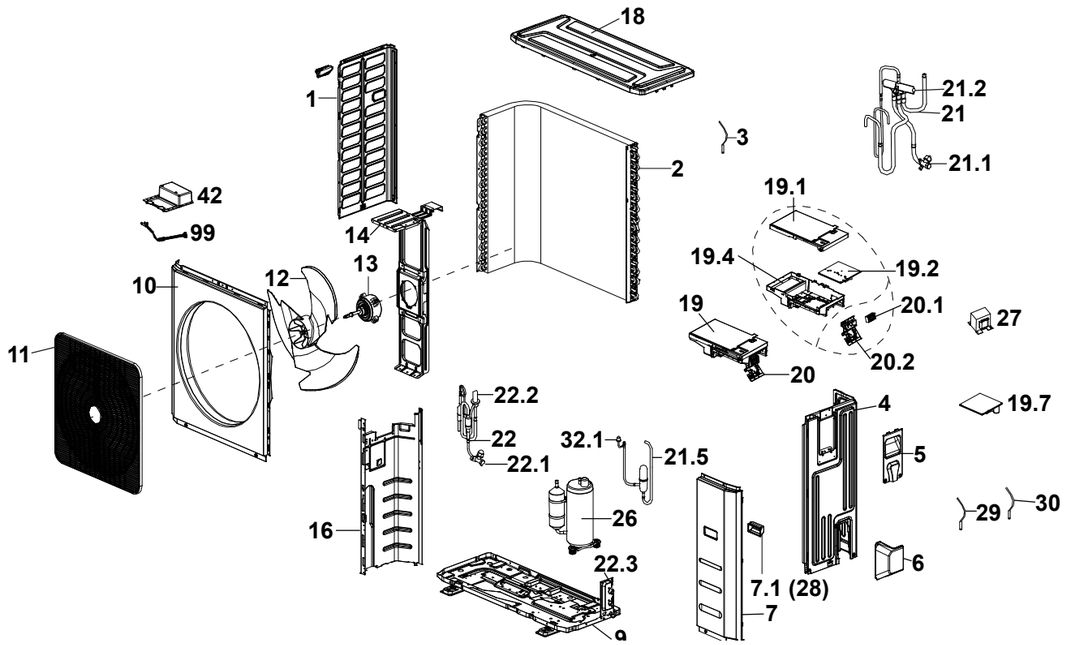

Ref.	Description	Part No.
STO - stocked to order, lead time 3-5 working days		
1	Left side plate cabinet assembly	-
2	Outdoor coil	-
3	Pipe temperature sensor	84000040
4	Rear right clapboard assembly	-
5	Electrical side cover	-
6	Service valve cover	-
7	Front right clapboard assembly	-
7.1	Handle	-
9	Chassis assembly	-
10	Front panel	-
11	Air outlet grille	84002139
12	Fan blade 7-10kW	14092 (STO)
13	Outdoor motor	84002151
14	Fan motor sub-assembly support	-
16	Partition board assembly	-
18	Top cover assembly	-
19	PCB control	84000094
19.1	Electronic control box cover	-
19.2	Outdoor main control board sub-assy.	-
19.4	Electronic installing box	-
19.7	Inverter control board sub-assembly	-
20	Terminal board sub-assembly	-
20.1	Wire joint	-
20.2	Terminal board	-
21	Valve assembly 4-way	-
21.1	Gas valve	-
21.2	Valve 4-way	-
21.4	Suction pipe	-
21.5	Discharge pipe	-
22	Liquid valve assembly	-
22.1	Suction valve	84000041
22.2	Electronic expansion valve	-
22.3	Valve plate	
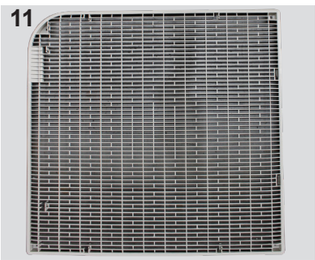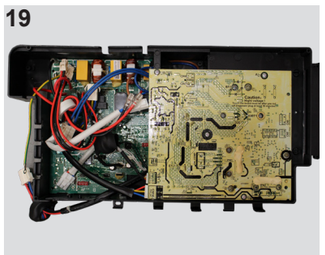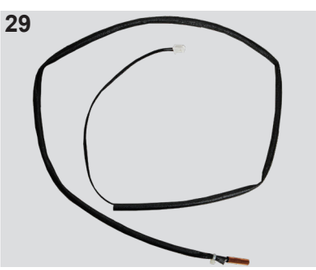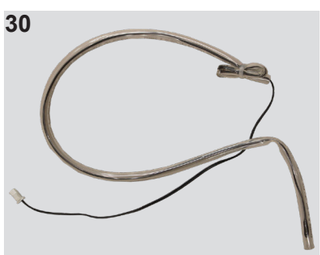
Ref.	Description	Part No.
26	Compressor	84000053
27	Transformer (reactor)	84000199
29	Discharge temp. sensor 7-10	B024197
30	Room temp. sensor	84000028
42	DR module box sub-assy.	-
99	Compressor wire assy.	-
-	Heatsink temp sensor	84000052
-	Transformer	84000196
Refrigeration pipe connections		
-	Nut brass flare 3/8	15017
-	Nut brass flare 5/8	15019