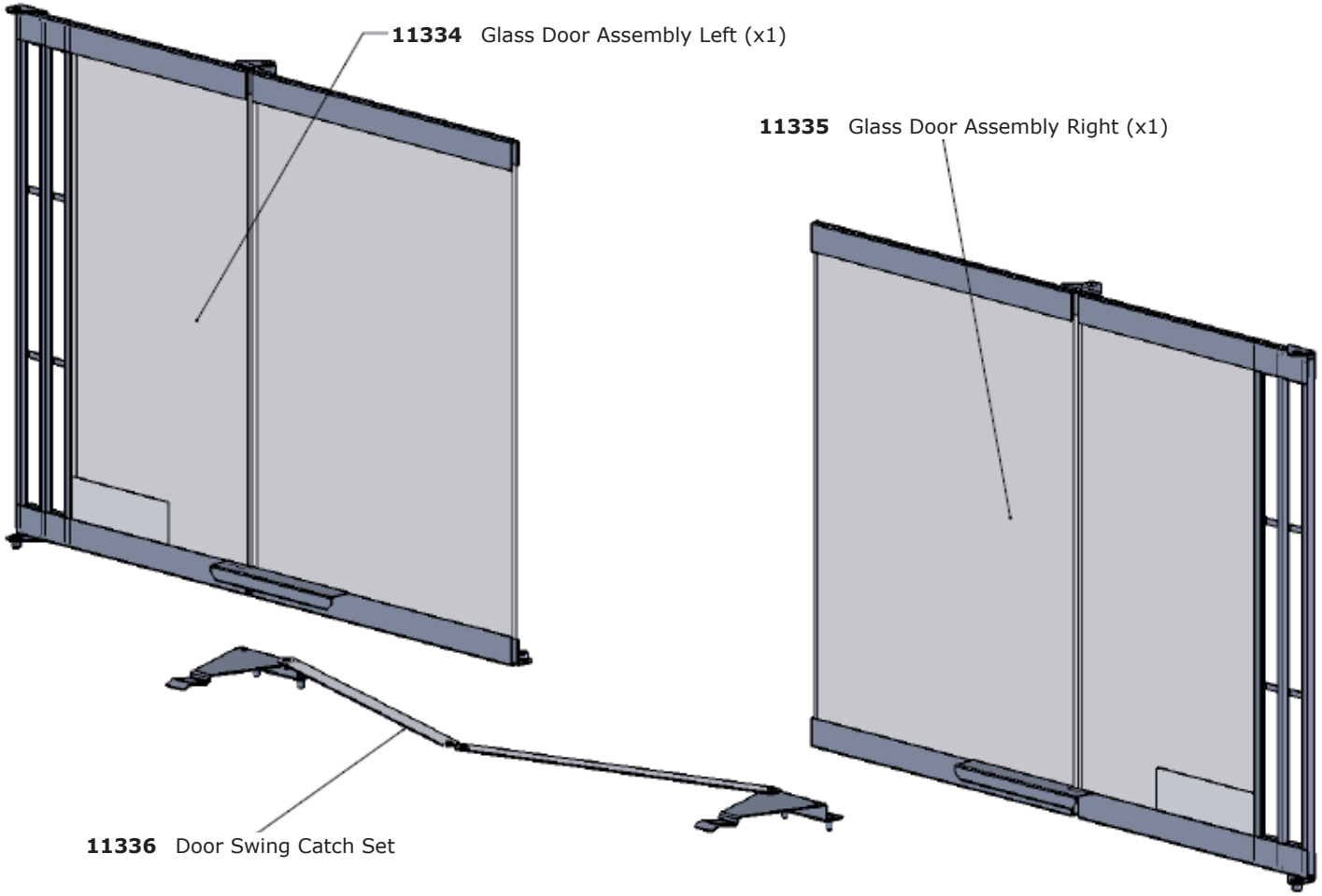Rinnai | Impression Outdoor Fire - Glass Door Assembly