Rinnai | Timberflame IB30

Due to the age of this appliance only limited parts are still available.

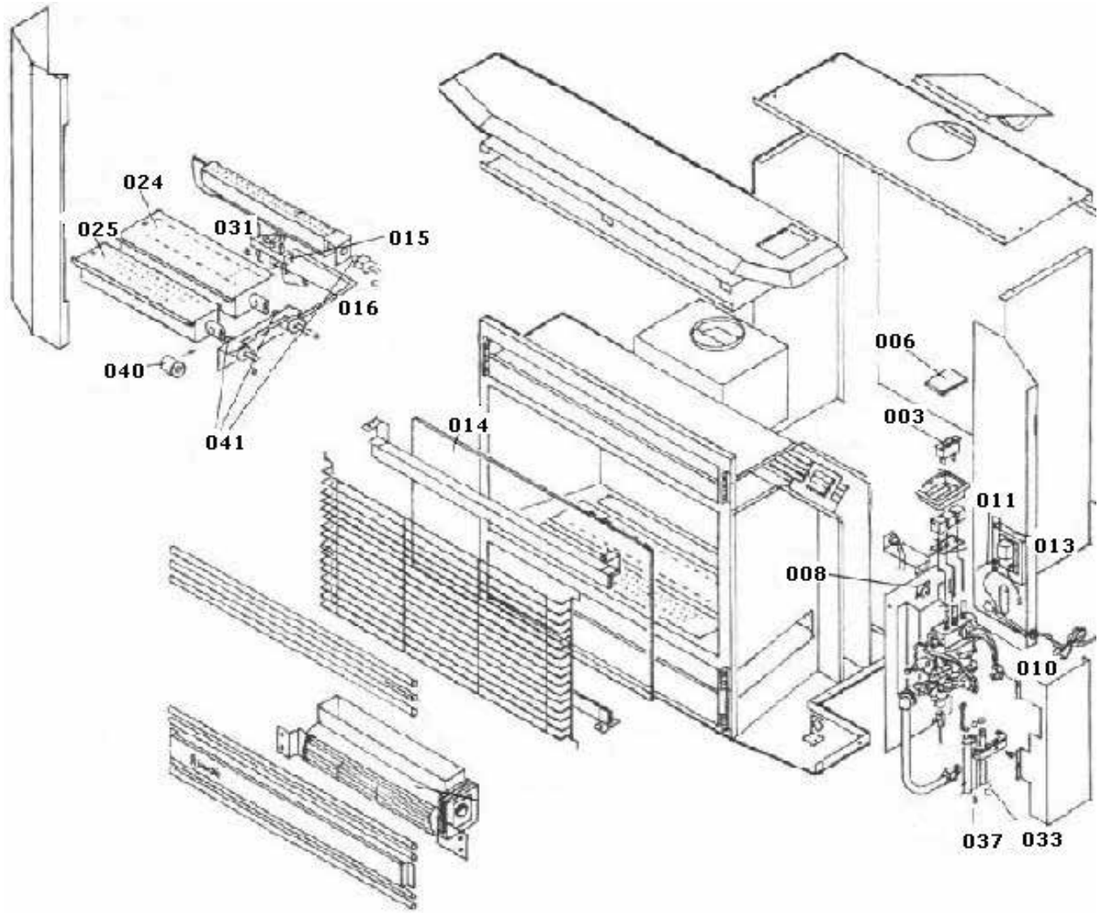

Ref.	Description	Part No.
003	Fan switch (rocker)	7089
006	Control box lid	7124
-	Control box	7125
008	Fan sensor	6635
010	Gas control assembly	4995
011	Sparker lead	R7205
-	Power cord	6765B
013	Sparker	6917
014	Glass seal replacement tape kit	R7010
014	Glass assembly including seal	10861
015	Electrode	7007
016	Pilot assembly with NG injector 0.45	7008
016	Pilot assembly with LPG injector 0.30	7008L
024	Main burner NG	4970
024	Main burner LPG	4971
025	Front burner	7040
028	Control snap pin (3)	5476
031	Thermocouple clip (2000)	9377
031	Thermocouple	7118
033	Control button (3)	7204
-	Gas supply tube C rear	7213
-	Gas supply tube A middle	7214
037	Glass supply tube B front	7211
040	Aeration sleeve (NG only)	7258
041	Injector NG 1.30 rear	5452
041	Injector NG Bray 200 front	7183
041	Injector LPG 0.80 front & rear	5450
041	Injector LPG Bray 170 middle	7184
041	Injector NG Bray 420 middle	7182

Timberflame IB30

Due to the age of this appliance only limited parts are still available.

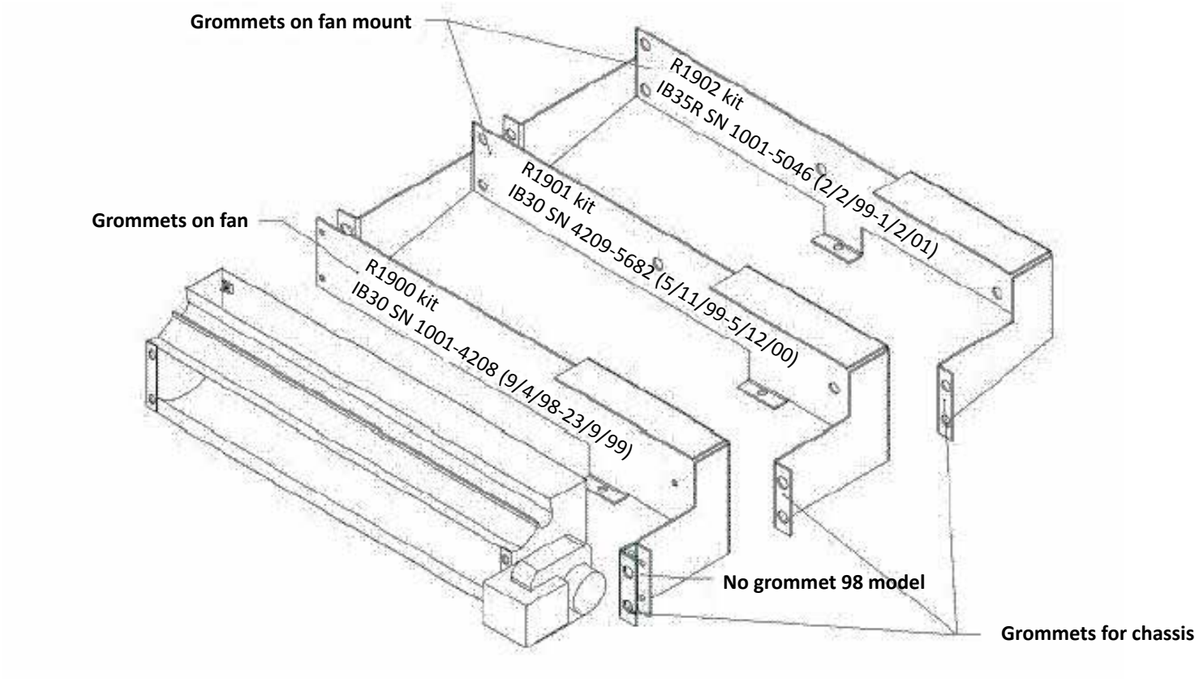

Parts not shown in exploded diagrams

Description	Part No.
Cord holder	6653
Fan mounting bracket	7129
Fan mounting sleeve	7130
Flare nut ½	5064
Front heat exchanger	6620
Gas tube retainer	6643
Inlet elbow	7203
Inlet tube	7271
Log locating sleeve	7240
Log set with granules	7044
Pilot injector LPG 0.30	7009
Pilot injector NG 0.45	9600
Wiring harness	7215
Switch lead	10308
Fan mount kit	R1902

Paint information: Rinnai Timberflame fires

Serial numbers and paint codes

- Up to serial number 6358 and 6371 use suffix S on part number (masque)
- From serial number 6359 onwards use suffix SP on part number

(source: M.Hughes 25/11/02)

Touch-up paints

- Silver touch-up paint R1880
- Black touch-up paint R1881

Paint codes for product manufactured at RNZ

- Ameron 5326638 viper satin
- Orica Rinnai silver 95496618 current local silver, RAC silver, RA silver
- Rahasia silver SP5182 new silver for local market

(source: R.Large 28/12/04)